GALILEI

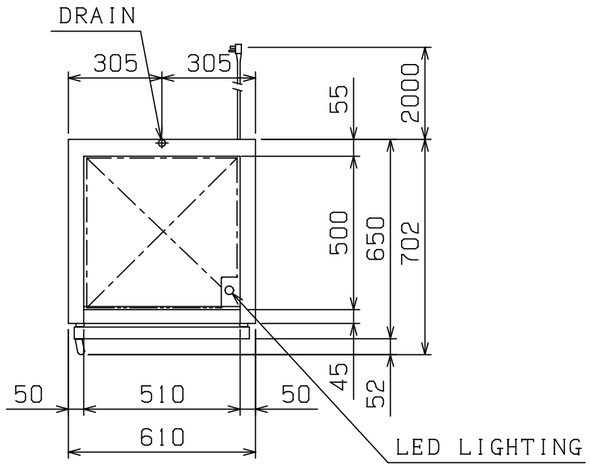

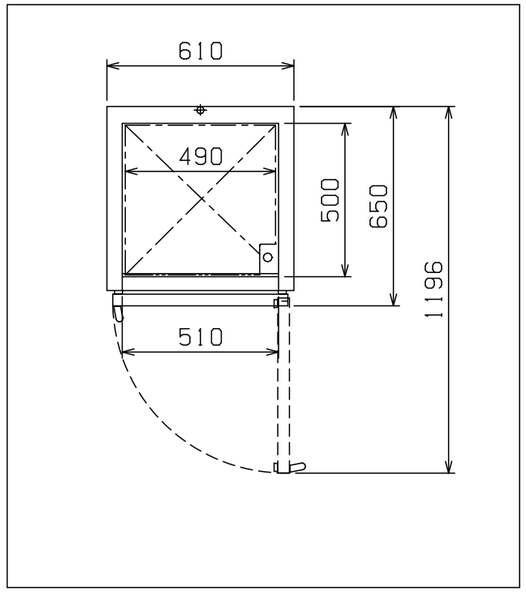

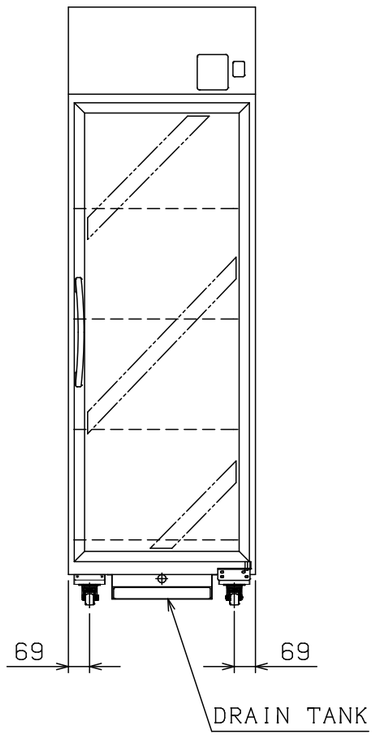

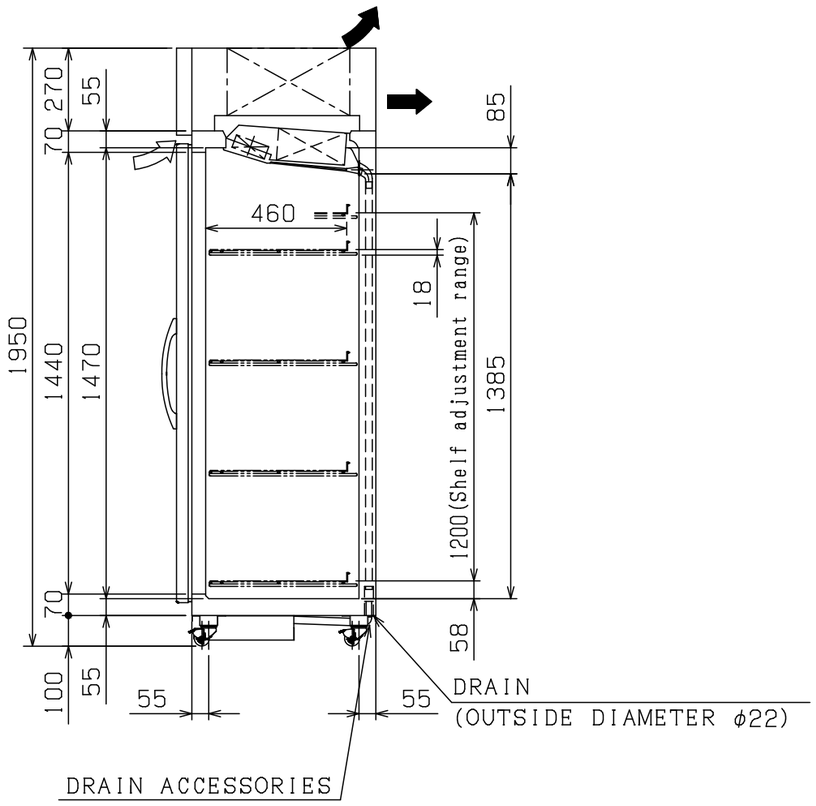

PRODUCT NAME	Commercial Refrigerator Showcase	
MODEL	UEN-060REC-TH	
POWER SUPPLY	Single Phase 220V 50Hz	
OUTSIDE DIMENSIONS	(W)610mmX(D)650mmX(H)1950mm	
INSIDE DIMENSIONS	(W)510mmX(D)500mmX(H)1470mm	
EFFECTIVE CAPACITY	333L	
WEIGHT	90kg	
EXTERIOR MATERIAL	Color Steel(Front and Sides) Galvanized Steel(Top) Galvanized Steel(Rear and Bottom)	
INTERIOR MATERIAL	Color Steel	
DOOR MATERIAL	Resin Frame Low-E Pair Glass Magnet-Style Packing	
INSULATION MATERIAL	Polyurethane Foam	
ADJUSTABLE SHELF MATERIAL	Steel Wire Resin coating	
COOLING PERFORMANCE	0℃ to 10℃ (No Load and Ambient Temperature of 30℃)	
COMPRESSOR	140W	
REFRIGERANT CONTROL METHOD	Capillary Tube	
CONDENSER	Wire Condenser Type, Forced Air-Cooling	
EVAPORATOR	Fin and Tube Type, Forced Cold Air Circulation	
REFRIGERANT	R-134a	
TEMPERATURE CONTROL	Microcomputer Control, Digital Display	
DEFROST CONTROL	Microcomputer Control Offcycle Defrost	
APPLICABLE BREAKER CAPACITY	Single Phase 220V 15A 50Hz	
POWER CORD	2.0m(Plug with Earth Wire)	
VOLTAGE RANGE	220V±6%	
COOLING	Operation Current	1.4A
	Starting Current	12A
	Power Consumption	255W
	Power Factor	83%
DEFROSTING	Operation Current	0.1A
	Power Consumption	28W
OPERATING TEMPERATURE RANGE	5℃ to 35℃	
RADIATION OF HEAT CAPACITY	510W	
ADJUSTABLE LEG	Caster with stopper	
ACCESSORIES	Shelves(4 Pieces) Drain Accessory(1 Set) Drain Tank(1 Set)	
OTHER ACCESSORIES	Internal Lighting(LED)	

We may change it without a notice for improvement about the specifications and design.

⇨ SUCTION AIR
➡ EXHAUST AIR

PLUG TYPE

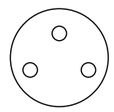

		REFERENCE NO
DATA 06・05・2021	SCALE 1/20	DRAWING NO
GALILEI (THAILAND) CO., LTD.		