GALILEI

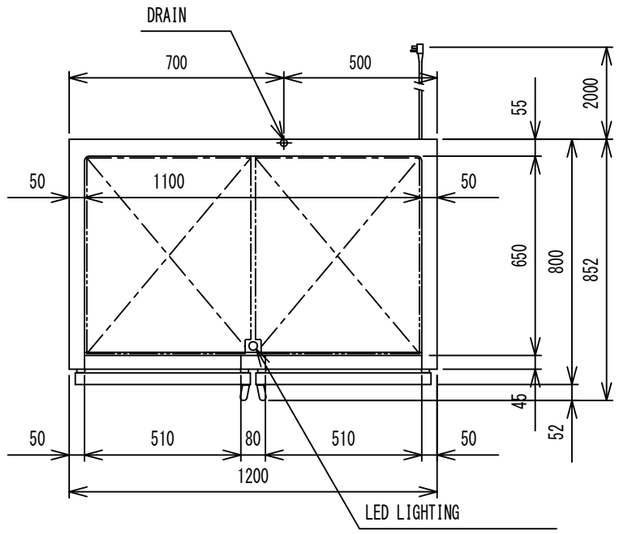

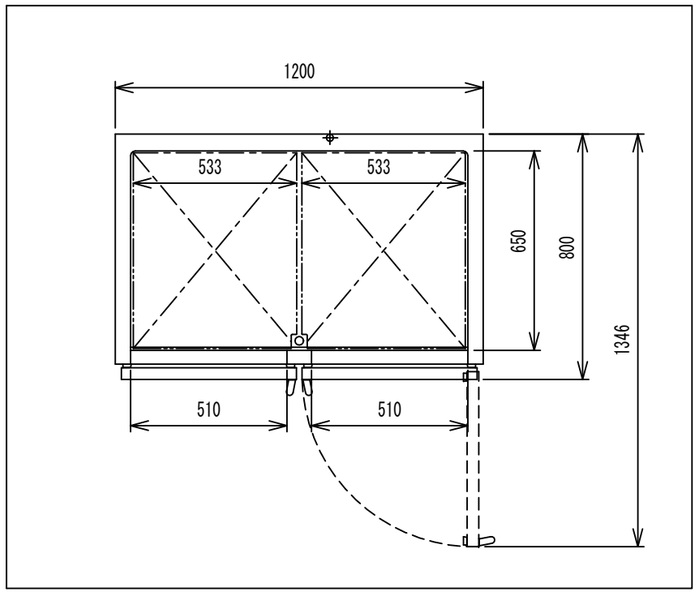

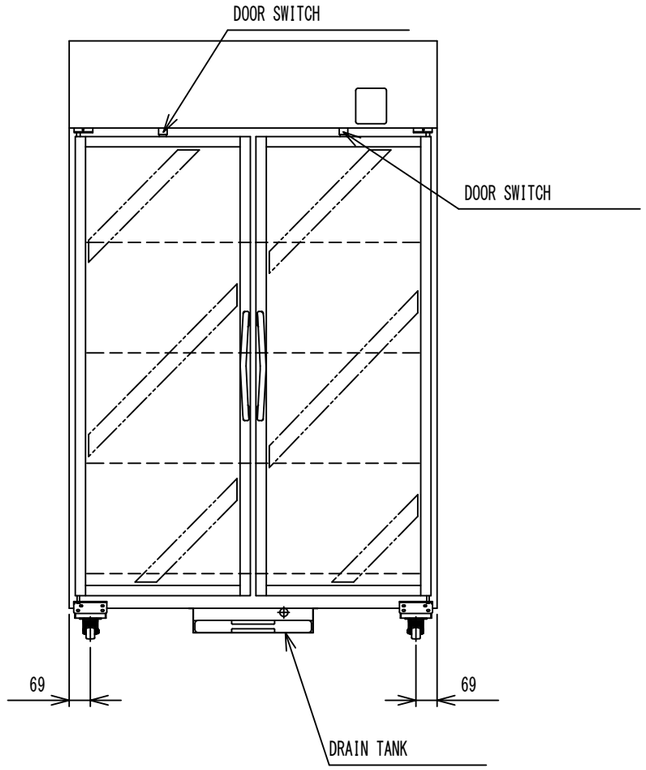

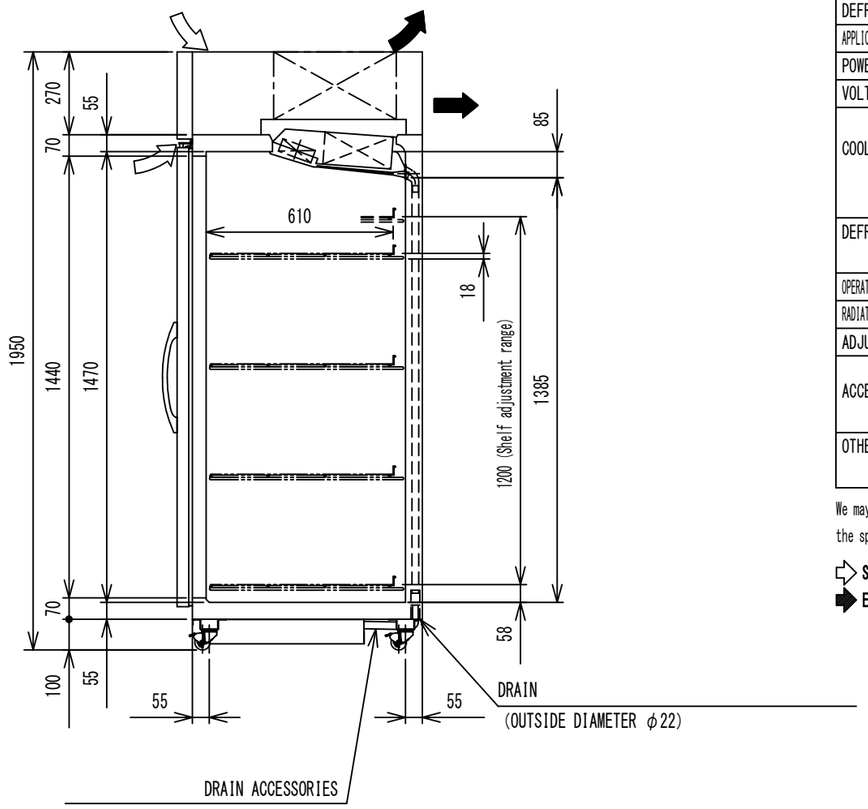

PRODUCT NAME	Commercial Freezer Showcase	
MODEL	UED-120FEC-TH	
POWER SUPPLY	Single Phase 220V 50Hz	
OUTSIDE DIMENSIONS	(W) 1200mm× (D) 800mm× (H) 1950mm	
INSIDE DIMENSIONS	(W) 1100mm× (D) 650mm× (H) 1470mm	
EFFECTIVE CAPACITY	1026L	
WEIGHT	195kg	
EXTERIOR MATERIAL	Color Steel(Front and Sides) Galvanized Steel(Top) Galvanized Steel(Rear and Bottom)	
INTERIOR MATERIAL	Color Steel	
DOOR MATERIAL	Aluminum Frame Low-E Triple Glass Magnet-Style Packing	
INSULATION MATERIAL	Polyurethane Foam	
ADJUSTABLE SHELF MATERIAL	Steel Wire Resin coating	
COOLING PERFORMANCE	-25℃ to -15℃ (No Load and Ambient Temperature of 30℃)	
COMPRESSOR	425W ×2	
REFRIGERANT CONTROL METHOD	Capillary Tube	
CONDENSER	Fin and Tube Type,Forced Air-Cooling	
EVAPORATOR	Fin and Tube Type,Forced Cold Air Circulation	
REFRIGERANT	R-404A	
TEMPERATURE CONTROL	Microcomputer Control,Digital Display	
DEFROST CONTROL	Microcomputer Control Defrost Heater	
APPLICABLE BREAKER CAPACITY	Single Phase 220V 15A 50Hz	
POWER CORD	2.0m(Plug with Earth Wire)	
VOLTAGE RANGE	220V±6%	
COOLING	Operation Current	4.8A
	Starting Current	13A
	Power Consumption	970W
	Power Factor	92%
DEFROSTING	Operation Current	2.9A
	Power Consumption	644W
OPERATING TEMPERATURE RANGE	5℃ to 35℃	
RADIATION OF HEAT CAPACITY	1410W	
ADJUSTABLE LEG	Caster with stopper	
ACCESSORIES	Shelves (8 Pieces) Drain Accessory(1 Set) Drain Tank(1 Set)	
OTHER ACCESSORIES	Internal Lighting(LED) Condenser Filter	

We may change it without a notice for improvement about the specifications and design.

⇨ SUCTION AIR
➡ EXHAUST AIR

PLUG TYPE

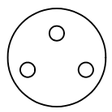

		REFERENCE NO
DATA 09・09・2022	SCALE 1/20	DRAWING NO
GALILEI(THAILAND)CO.,LTD.		